nh S3 14

IP20 Dimmable: +◐–

DESSINÉ PAR

Neri&Hu

DESCRIPTION

nh continues the study on the dynamic interaction of expertise, details, materials, form, and light that Neri&Hu are developing with Artemide. The selected materials represent a perfect combination of tradition and innovation, as well as the expression of responsible and sustainable design, also conveyed by the use of a lowconsumption retrofit LED source. Like all the projects designed by Neri&Hu, nh offers a reinterpretation of the Oriental culture and tradition with a constant contemporary approach. With surprising lightness and elementary movements nh creates a landscape of elements generating – either individually or combined with each other – a non-static balanced composition characterized by elegant colour and material matching.

DESSINS TECHNIQUES

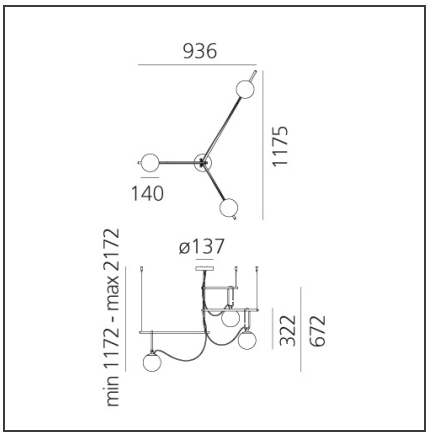

CARACTÈRISTIQUES

Code Article :	1276010A	**Matériaux:**	Blown glass, brushed brass
Couleur:	Black/brass		
Installation:	Suspension	**Séries:**	Design, 2019 Artemide Collection
Environnement:	Indoor		

DIMENSIONS

Longueur :	cm 135	**Test au fil incandescent:**	850
Hauteur:	cm 67.2		
Diamètre de la base:	cm 13.7		
Hauteur max. du plafond:	cm 217		

SOURCES NON FOURNIES

Catégorie:	LED	**Température de Couleur (K):**	3000K
Nombre:	3		
Watt:	5W		
Typologie:	2		
Culot:	E14		
Class:	A		

LUMINAIRE

Watt:	12W	**Flux Lumineux (lm):**	772lm
Tension:	220-240V	**CCT:**	3000K
		Efficiency:	80%
		Efficacy:	64.31lm/W
		CRI:	0

Remarques

The glass balls and brass rings can slide along the rods, which can be fixed according to an orientation chosen by the customer. The light intensity can only be adjusted with dimmable bulbs. Maximum bulb length 80mm. Maximum bulb diameter: 50mm.