KUSHI XL CEILING

ALBERTO SAGGIA & VALERIO SOMMELLA / 2022



CODES

220-240 V	
K217105N	black
K217105O	brass
K217105R	copper
120 V	
K217105NUS	black
K217105OUS	brass
K217105RUS	copper

TECHNICAL DATA

Light source type	E27 / E26
Lamp power	2 x 70 W max
Feeding	220-240 V / 120 V
Dimmable	Yes

PRODUCT INFORMATION

Installation	Ceiling / Wall
Net weight	4.30 kg / 9.46 lbs
Structure	
Colour	Black RAL9005
Finish	Matte
Material	Powder coated metal
Colour	Brass or copper
Finish	Shiny
Material	Plated metal
Diffuser	
Colour	White
Finish	Matte
Material	Two layers of mouth blown glass

TECHNICAL DRAWINGS

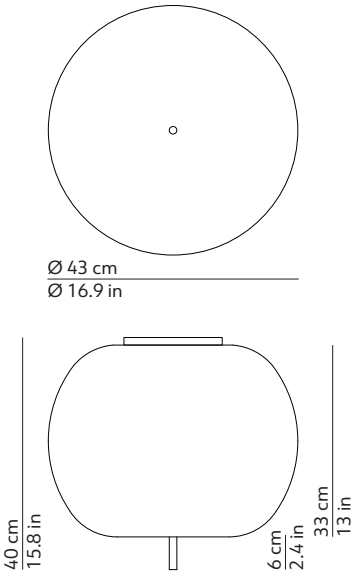

PACKAGING

Box 1	Structure
Dimensions L x W x H	22 x 22 x 34 cm / 8.7 x 8.7 x 13.4 in
Volume	0.016 m^3 / 0.581 ft^3
Gross weight	1 kg / 2.2 lbs
Box 2	Diffuser
Dimensions L x W x H	51 x 51 x 42 cm / 20.1 x 20.1 x 16.5 in
Volume	0.109 m^3 / 3.858 ft^3
Gross weight	4.8 kg / 10.56 lbs

Rev.01 - June 2024