

Orion Mix

Wall Sconce/Flush Mount - B720

Globe Collection

Schwung Product Information

Vaulted Ceiling Mount

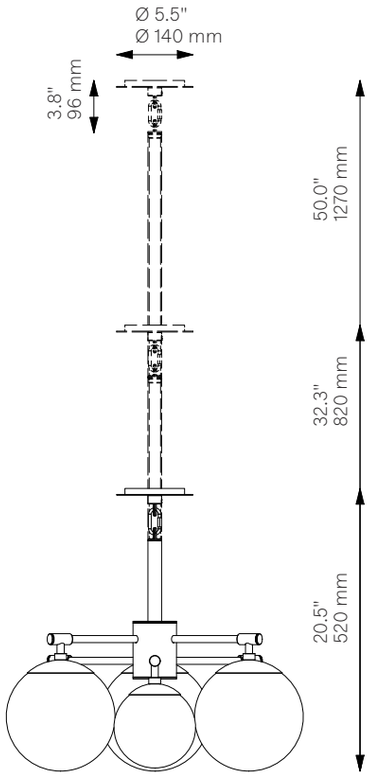

Fixed Mount

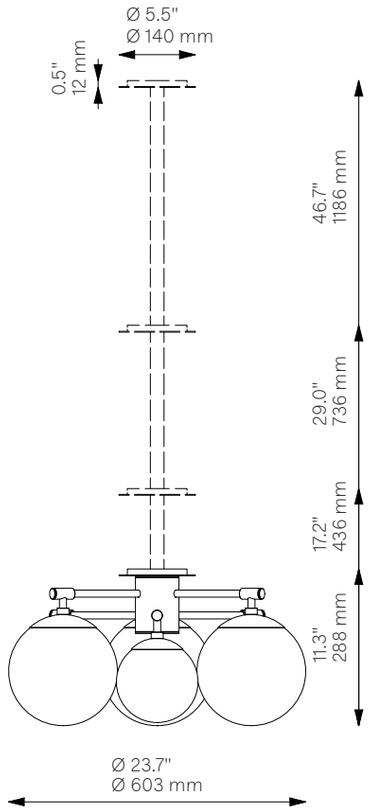

Glass Lampshades	3 x Ø 200 mm / Ø 7.9 " 3 x Ø 150 mm / Ø 5.9 " [1] Soda Lime Triplex Opal Matte Glass [2] Soda Lime Marble Matte Glass [3] Borosilicate Transparent Glass		
Weight	7,0 kg / 15.4 lb		
Light Source	LED Bulb (included) Max Wattage Total Lumens Color Temperature Bulb Base Power Supply Dimmable with electronic dimmers only (ELV, trailing edge)	6 x 4-5 W 6 x 10 W 1320 lm 2200-3000 K E14 / E12 230/120V CE/UL	
Finishes	LBB / Lacquered Burnished Brass BGM / Black Gunmetal PN / Polished Nickel (extra charge of 25%) Classic Bronze Heritage Bronze		
Extension Rods (Included)	1 x 150 mm 1 x 5.9"	1 x 300 mm 1 x 11.8"	1 x 450 mm 1 x 17.7"
Canopy (Vaulted Ceiling Compatible)	Ø 140 mm Ø 5.5 "	H 12 mm H 0.5 "	
Certified	CE/UL		
Ingress Protection	IP 20		