

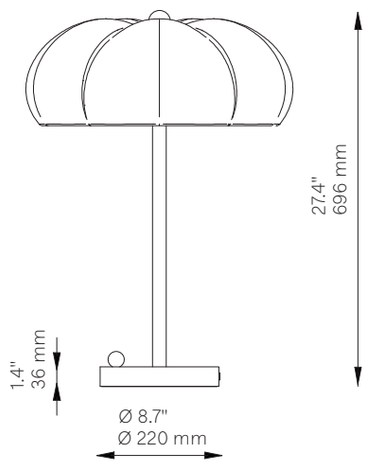

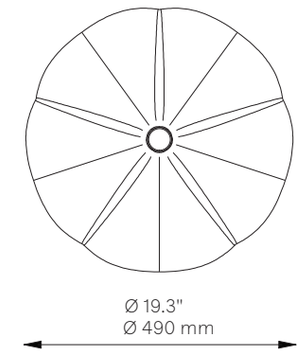

Hana LG

Table Lamp - B672

Hana Collection

Glass Lampshades	1 x Ø 490 mm x H 200 mm 1 x Ø 19.3'' x H 7.9'' [1] Borosilicate Sandblasted Glass	
Weight	7.6 kg / 16.8 lb	
Light Source	LED Bulb (included) Max Wattage Total Lumens Color Temperature Bulb Base Power Supply	3 x 4 W 3 x 15 W 660 lm 2200-3000 K E14/E12 230/120V CE/UL
Finishes	LBB / Lacquered Burnished Brass BGM / Black Gunmetal Classic Bronze Heritage Bronze	
Cord	3 m / 118.1" Dimmer and on-off switch location in base.	
Certified	CE/UL	
Ingress Protection	IP 20	