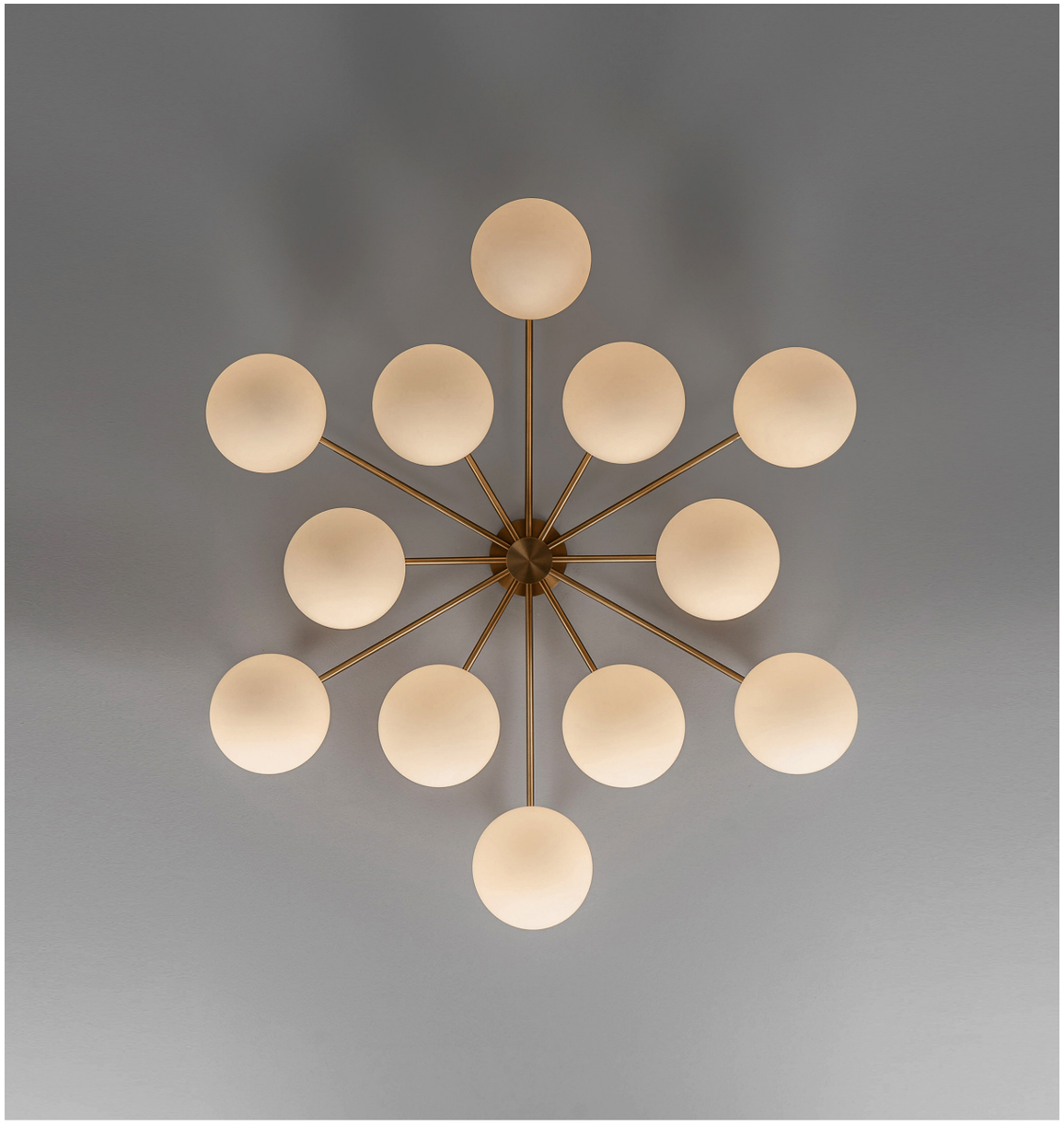

Orion Round

Flush Mount - B300

Globe Collection

Schwung Product Information

Vaulted Ceiling Mount

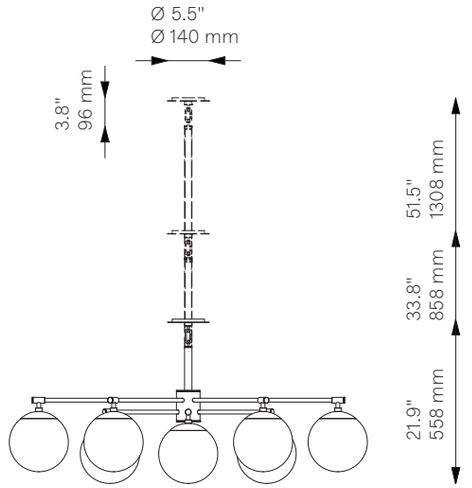

Fixed Mount

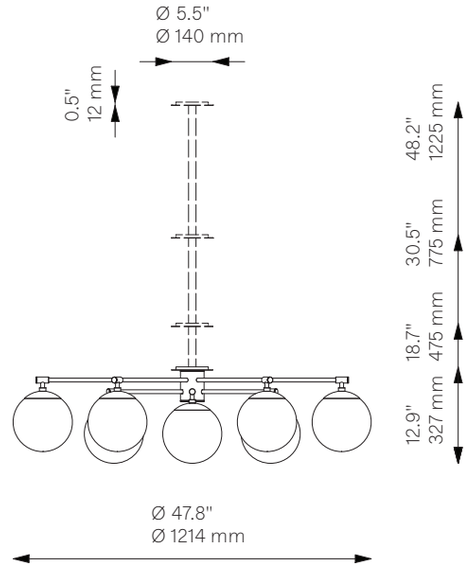

Glass Lampshades	12 x Ø 200 mm / Ø 7.9"		
	[1] Soda Lime Triplex Opal Matte Glass		
	[2] Soda Lime Marble Matte Glass		
	[3] Borosilicate Transparent Ribbon Glass		
Weight	19.5 kg / 43.0 lb		
Light Source	LED Bulb (included)	12 x 4-5 W	
	Max Wattage	12 x 10 W	
	Total Lumens	2640 lm	
	Color Temperature	2200-3000 K	
	Bulb Base	E14 / E12	
	Power Supply	230/120V CE/UL	
	Dimmable with electronic dimmers only (ELV, trailing edge)		
Finishes	LBB / Lacquered Burnished Brass		
	BGM / Black Gunmetal		
	PN / Polished Nickel (extra charge of 25%)		
	Classic Bronze		
	Heritage Bronze		
Extension Rods (Included)	1 x 150 mm	1 x 300 mm	1 x 450 mm
	1 x 5.9"	1 x 11.8"	1 x 17.7"
Canopy (Vaulted Ceiling Compatible)	Ø 140 mm	H 12 mm	
	Ø 5.5"	H 0.5"	
Certified	CE/UL		
Ingress Protection	IP 20		

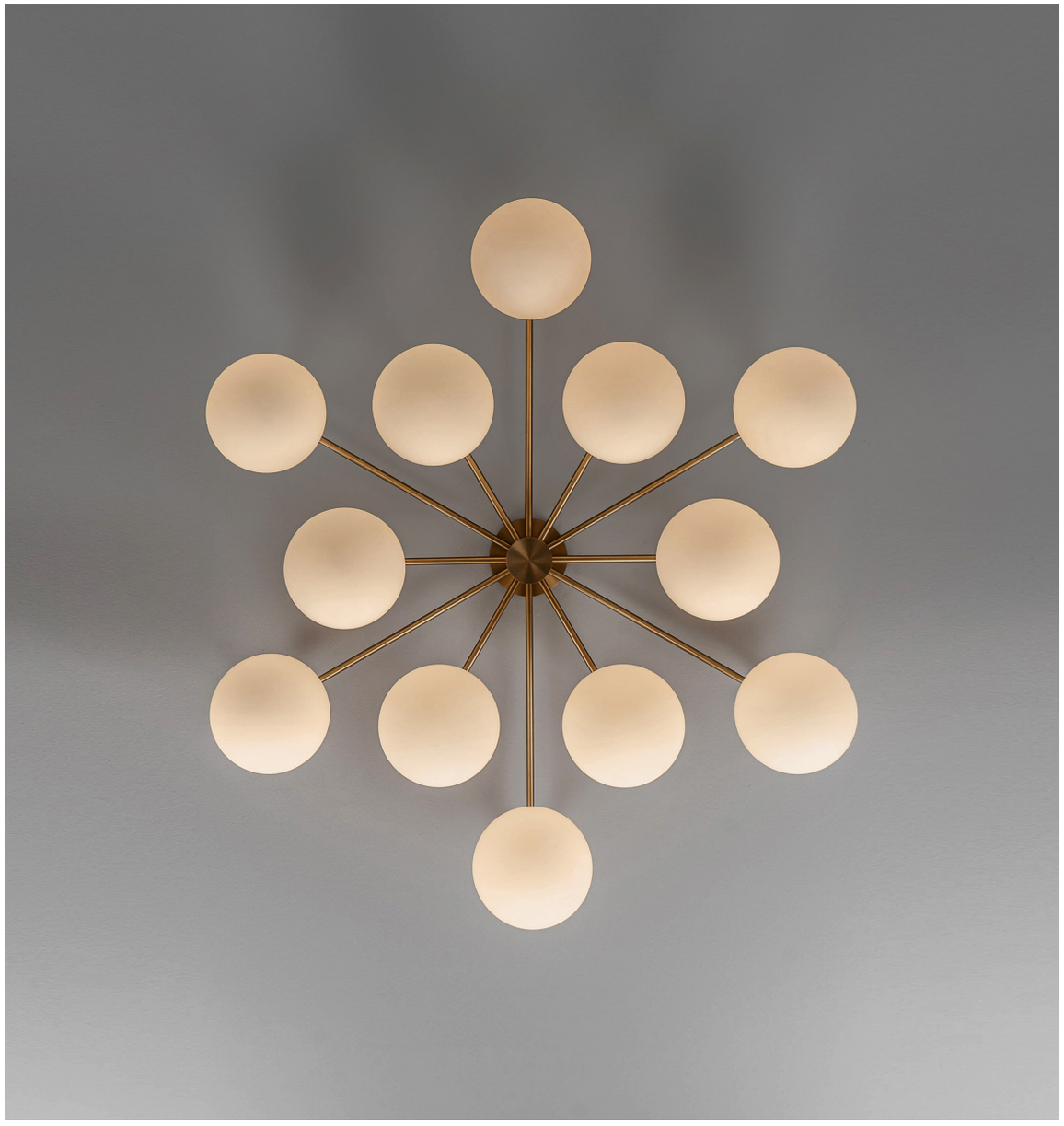

Orion Round

Flush Mount - B300

Globe Collection

Schwung Product Information

Vaulted Ceiling Mount

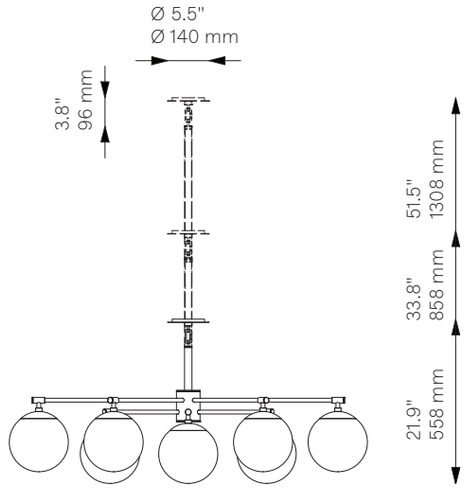

Fixed Mount

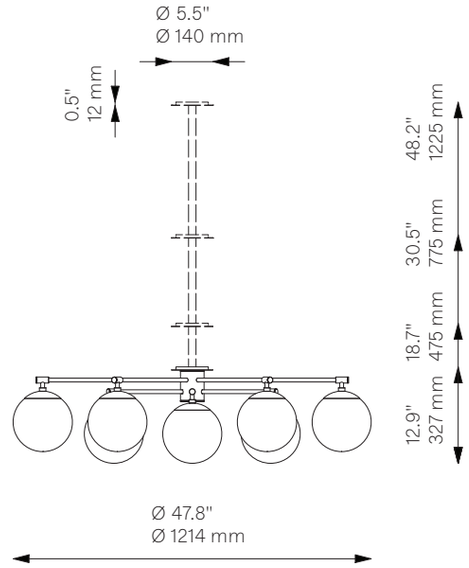

Glass Lampshades	12 x Ø 200 mm / Ø 7.9"		
	[1] Soda Lime Triplex Opal Matte Glass		
	[2] Soda Lime Marble Matte Glass		
	[3] Borosilicate Transparent Ribbon Glass		
Weight	19.5 kg / 43.0 lb		
Light Source	LED Bulb (included)	12 x 4-5 W	
	Max Wattage	12 x 10 W	
	Total Lumens	2640 lm	
	Color Temperature	2200-3000 K	
	Bulb Base	E14 / E12	
	Power Supply	230/120V CE/UL	
	Dimmable with electronic dimmers only (ELV, trailing edge)		
Finishes	LBB / Lacquered Burnished Brass		
	BGM / Black Gunmetal		
	PN / Polished Nickel (extra charge of 25%)		
	Classic Bronze		
	Heritage Bronze		
Extension Rods (Included)	1 x 150 mm	1 x 300 mm	1 x 450 mm
	1 x 5.9"	1 x 11.8"	1 x 17.7"
Canopy (Vaulted Ceiling Compatible)	Ø 140 mm	H 12 mm	
	Ø 5.5"	H 0.5"	
Certified	CE/UL		
Ingress Protection	IP 20		