

Milan 3 Arms

Floor Lamp - B070

Classic Collection

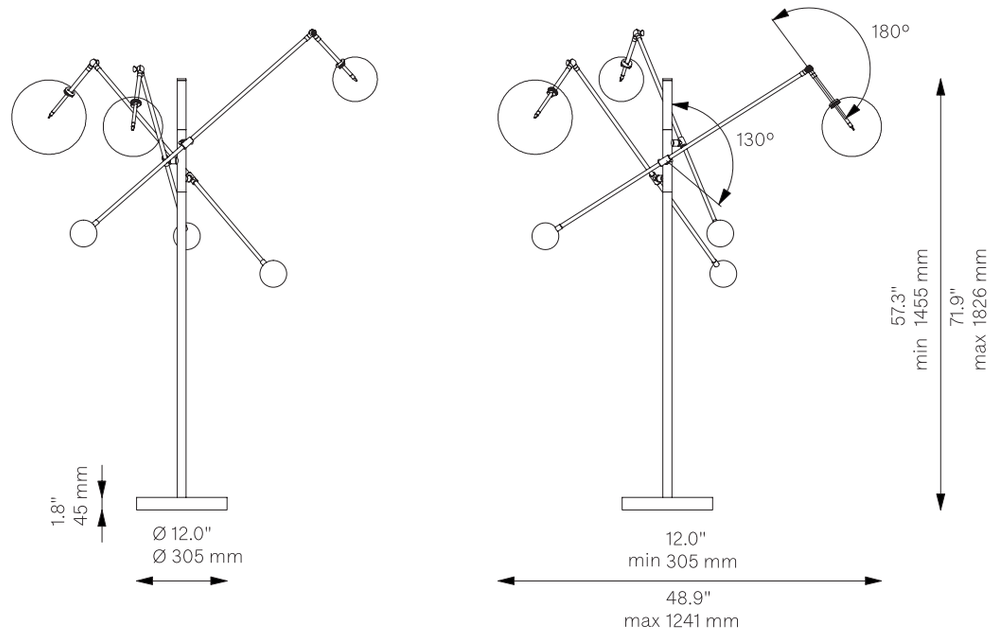

Glass Lampshades	1 x Ø 250 mm / Ø 9.8" 1 x Ø 200 mm / Ø 7.9" 1 x Ø 150 mm / Ø 5.9" [1] Borosilicate Transparent Glass [2] Organic Glass	
Weight	18.6 kg / 41.0 lb	
Light Source	LED Bulb (included) Max Wattage Total Lumens Color Temperature Bulb Base Dimmable with electronic dimmers only (ELV, trailing edge)	3 x 1.6 W 3 x 15 W 540 lm 2700 K G4, 12 V
Finishes	LBB / Lacquered Burnished Brass BGM / Black Gunmetal PN / Polished Nickel (extra charge of 25%) Classic Bronze Heritage Bronze	
Cord	3 m / 118.1" with inline on-off switch and plug Switch location 50 cm / 19.7" from the base	
Certified	CE/UL	
Ingress Protection	IP 20	